ASSEMBLY INSTRUCTION

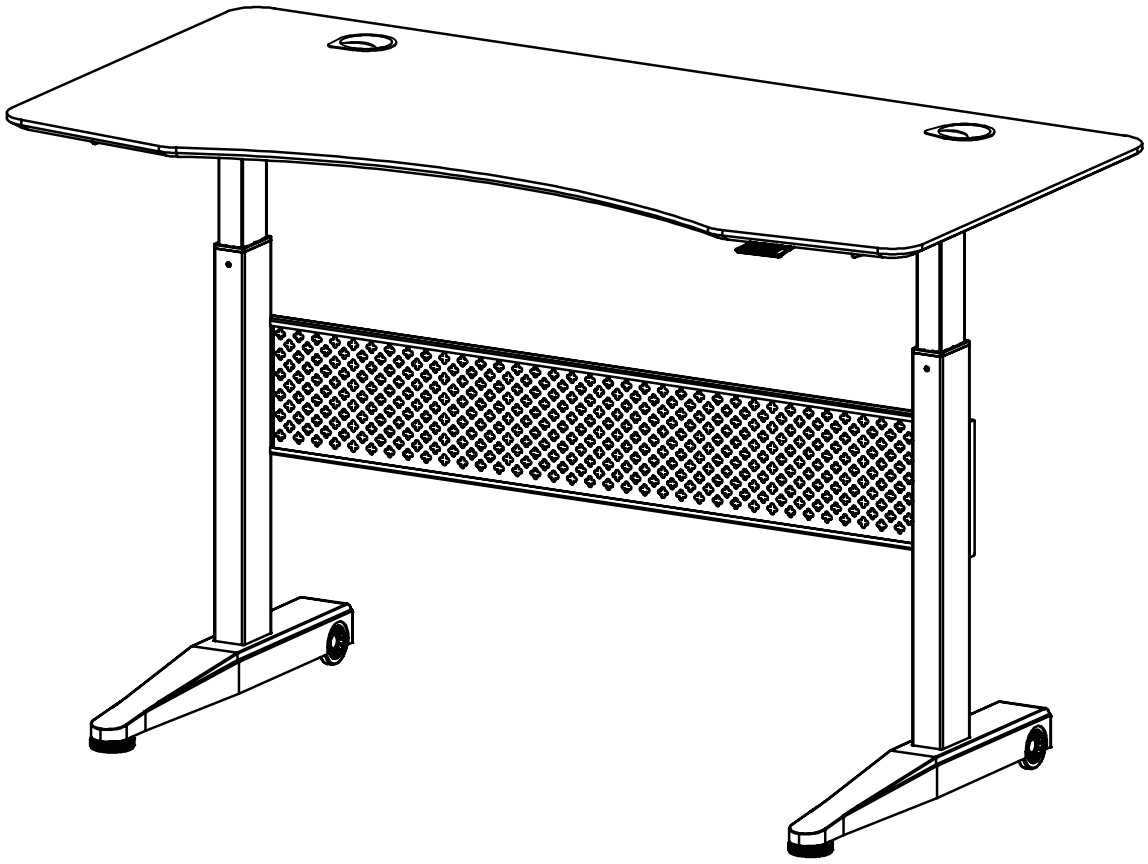

Caution:

1.The maximum static loading weight on the desk is 220lbs. However, the ideal loading weight is 11-18lbs., which allows the desk to easily move up and down.

2.As with most gas lifts, you many need to apply some upwards force to release the pressure with the initial use in cold temperatures.

3.Do not sit on desk and distribute weight evenly on top to prevent tipping.

Please supervise children to prevent them from climbing on the desk!

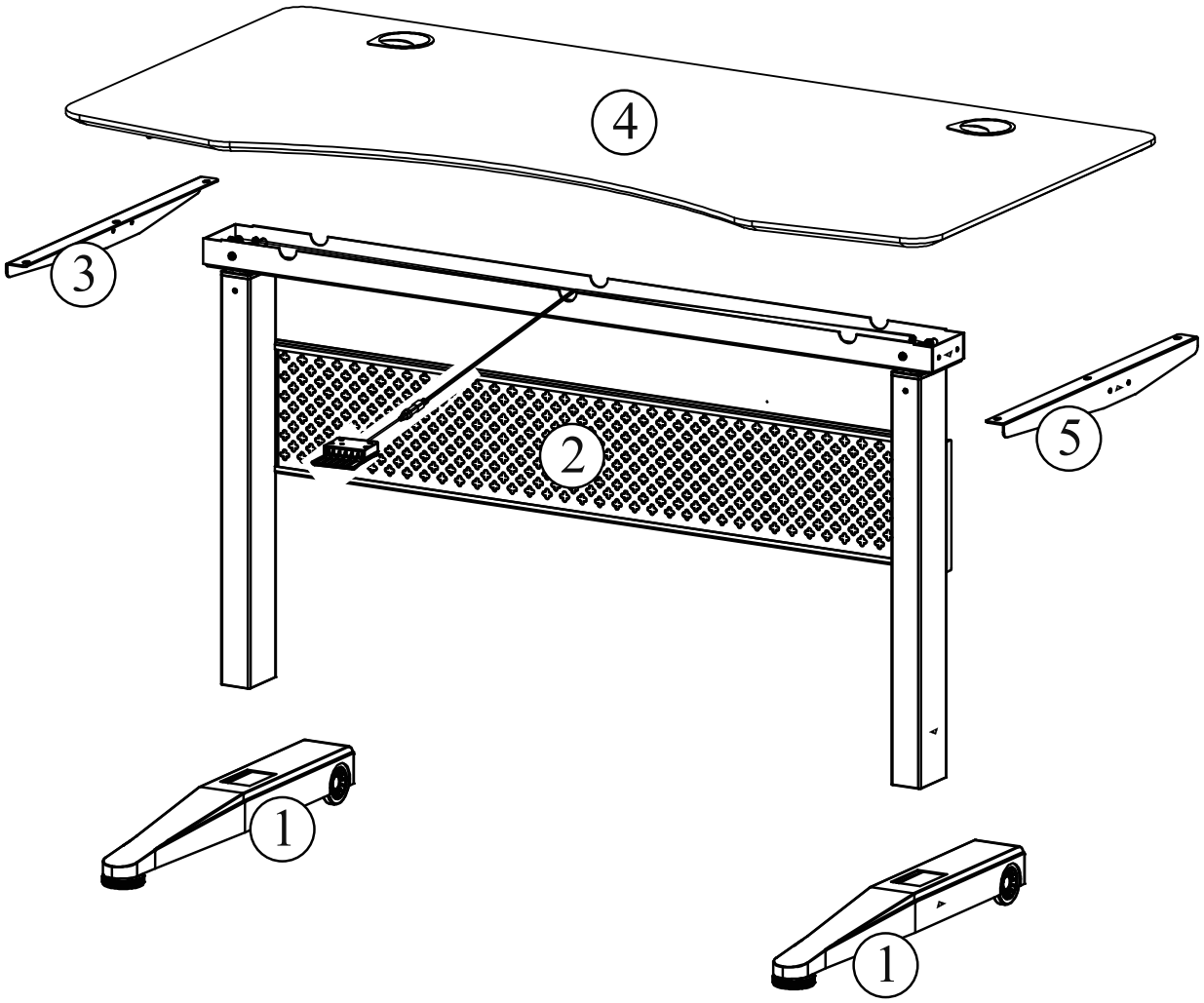

	Ax10	M6x12mm		Bx8	M6x25mm
	Cx2	M6x15mm	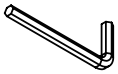	Dx1	4MM
	Ex3		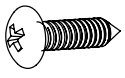	Fx3	M4X13

1

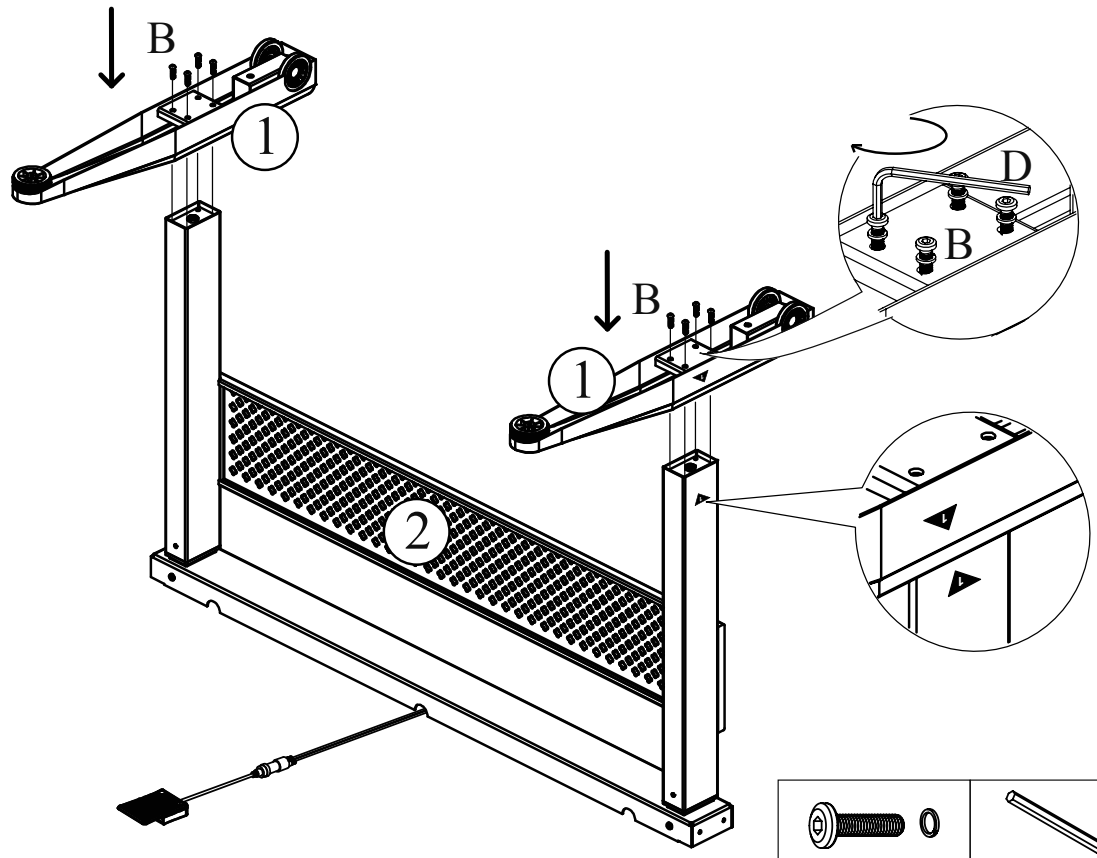

Bx8	Dx1

2

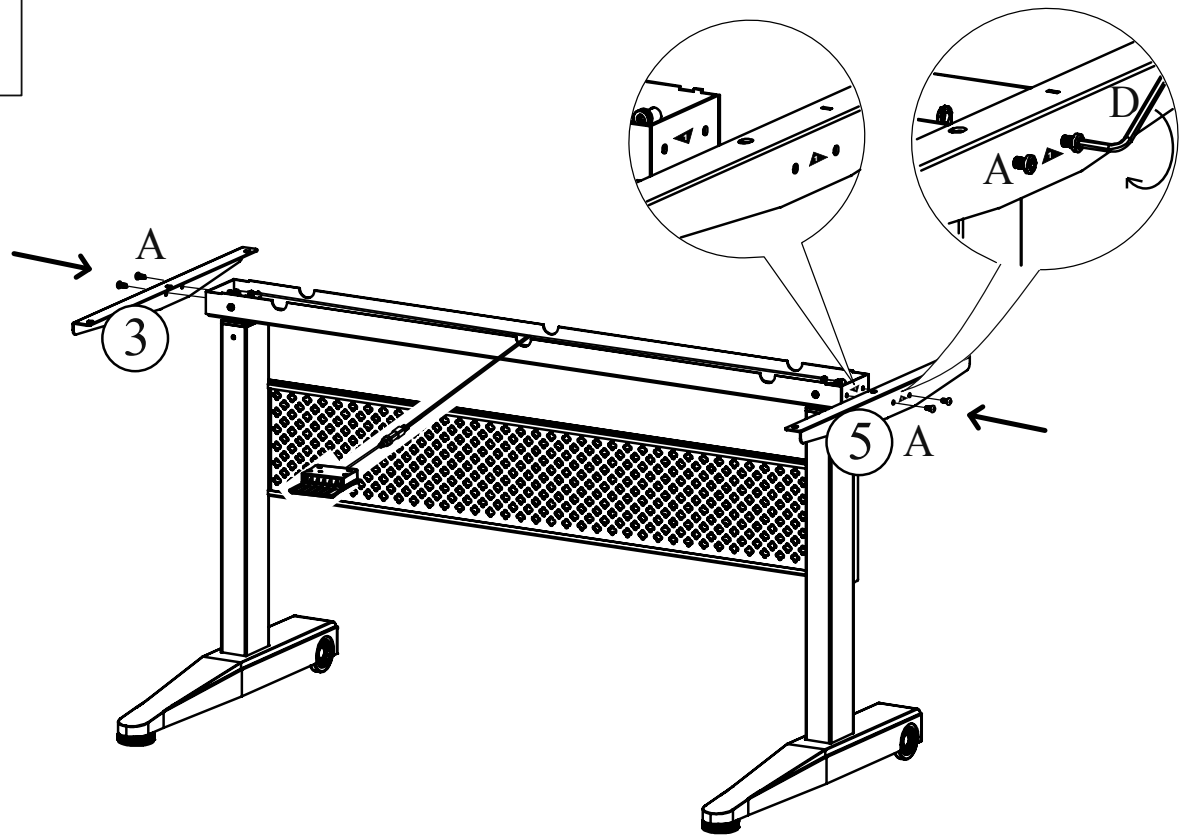

Ax4	Dx1

3

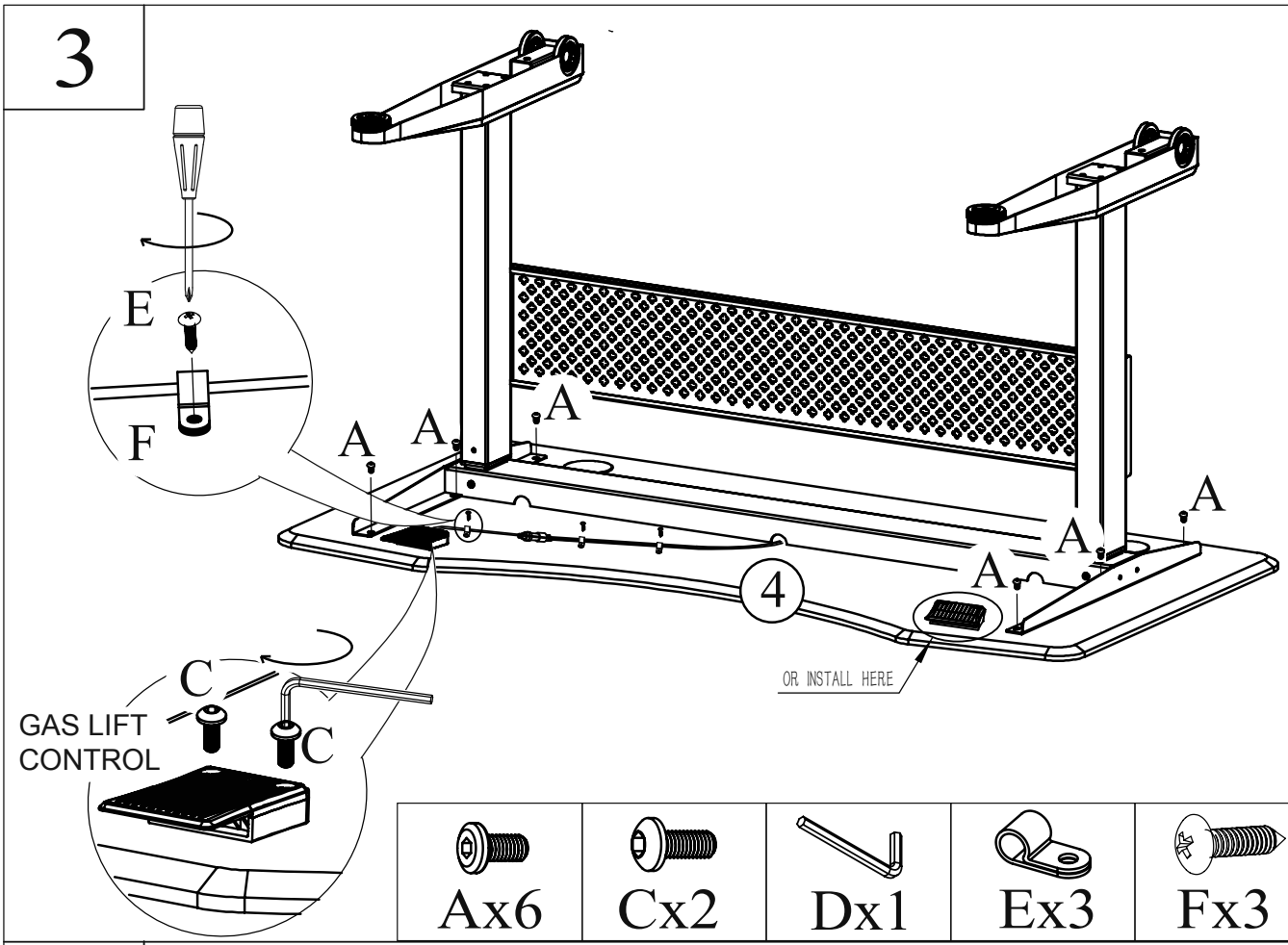

Ax6	Cx2	Dx1	Ex3	Fx3
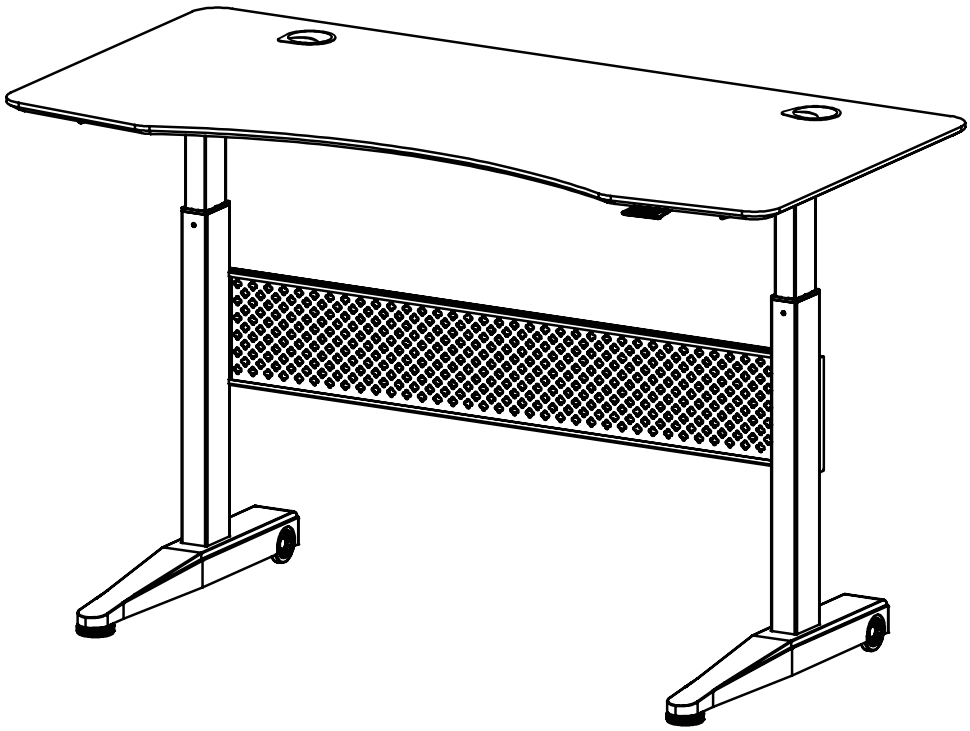
4